REVISIONS				
ZONE	REV	DESCRIPTION	DATE	APPROVED

NOTES:
1. ENCLOSURE SELECTED: CUSTOM BFP8–OS.
2. INSIDE DIMENSIONS: 142" L X 38" W X 78" H.
3. OUTSIDE DIMENSIONS: 145" L X 41" W X 81"H.
4. SLAB DIMENSIONS: 157"L X 53"W X 6" THICK.

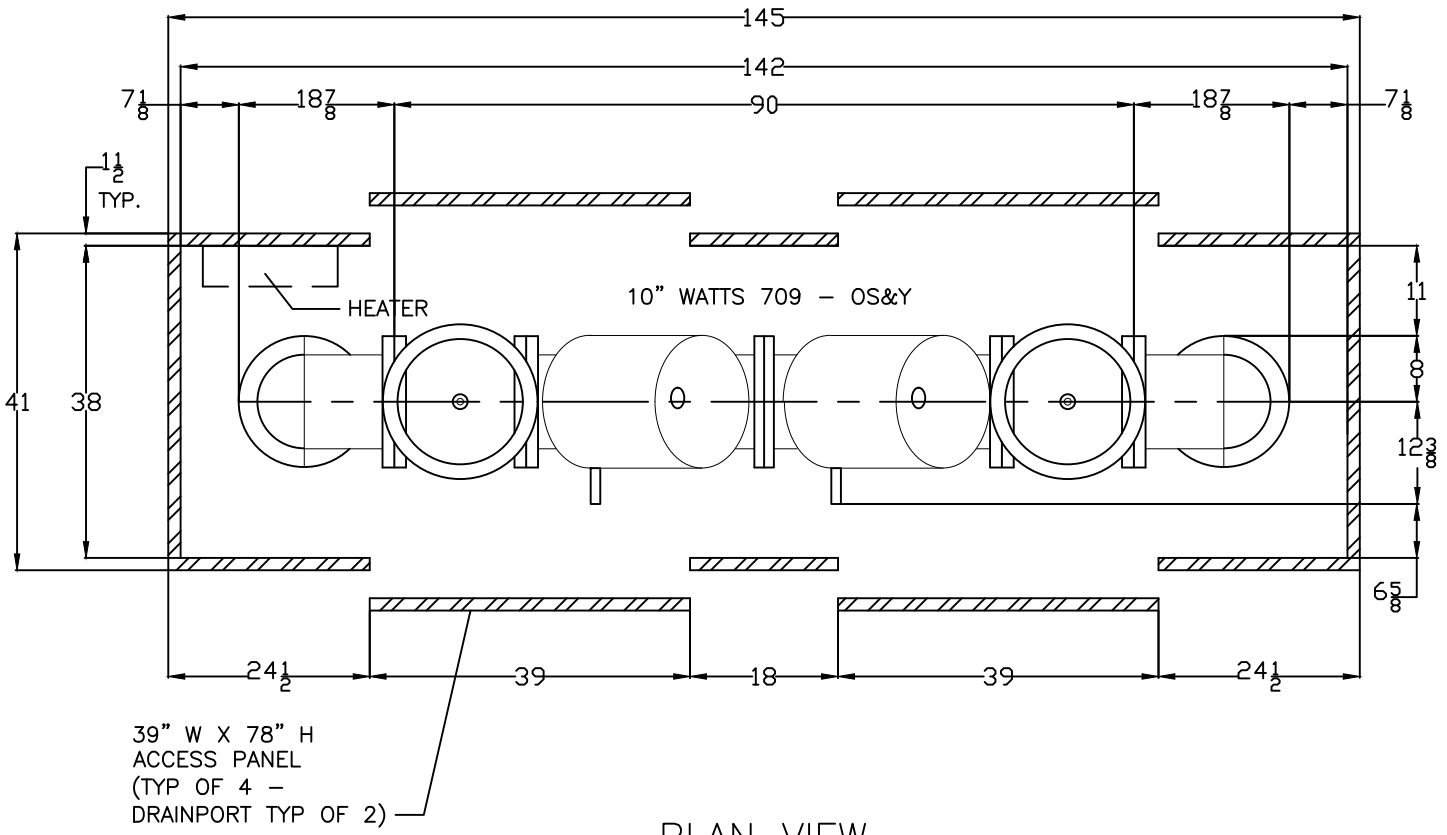

PLAN VIEW

CONTRACT NO:	10 WATTS 709–OS&Y
DRAWN BY: S. THOMAS	
CHECK BY:	AquaSHIELD ENCLOSURES — 1805 W.. 37th Place, North Little Rock, AR 72118, T: 501–791–1800, C: 501–791–1801
APPR. BY:	
ISSUED BY:	
DATE DRAWN: 6/21/19	SIZE 10" · ENCL. NO BFP8–OS · DWG NO 10–WATTS–709–OSY (1) · REV
	SCALE 1:1 · WEIGHT 545 · SHEET 1 OF 2

FNAME REVDATE USER