REVISIONS				
ZONE	REV	DESCRIPTION	DATE	APPROVED

NOTES:
1. SELECTED ENCLOSURE IS BFP3–O.
2. INSIDE DIMENSIONS ARE 74"L X 24"W X 55"H.
3. OUTSIDE DIMENSIONS ARE 77"L X 27"W X 58"H.
4. SLAB SIZE SHALL BE 89"L X 39"W X 6" THICK.

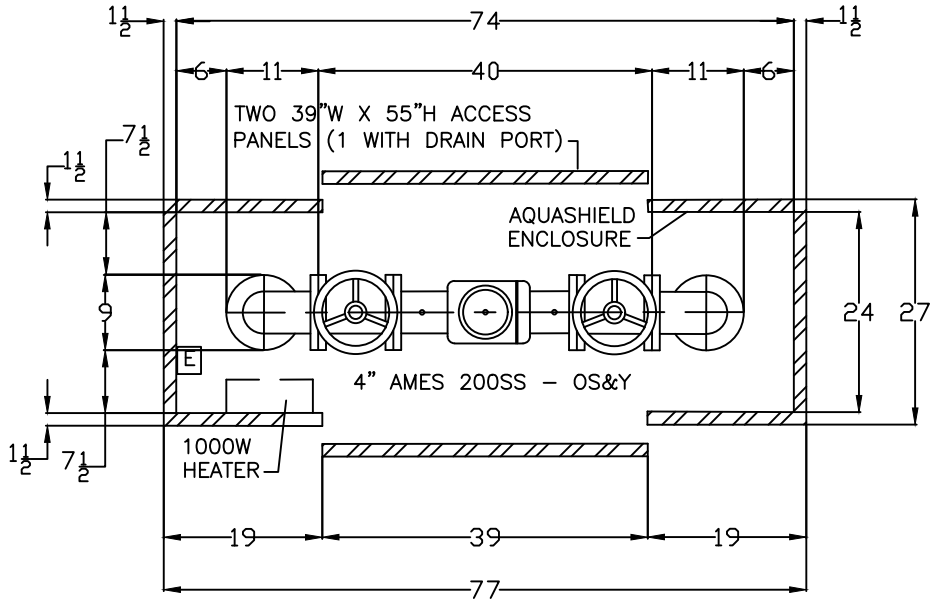

TOP VIEW

CONTRACT NO:	4" AMES 2000SS – OS&Y			
DRAWN BY: S. THOMAS				
CHECK BY:	AquaSHIELD ENCLOSURES	1805 W.. 37th Place North Little Rock, AR 72118 T: 501–791–1800 C: 501–791–1801		
APPR. BY:				
ISSUED BY:				
DATE DRAWN: 7/12/19	SIZE 4"	ENCL. NO BFP3–O	DWG NO 4 AMES 2000SS–OSY (1)	REV
DATE REVISED:	SCALE 1:1	WEIGHT 225	SHEET 1 OF 2	

FNAME
REVDATE
USER