REVISIONS				
ZONE	REV	DESCRIPTION	DATE	APPROVED

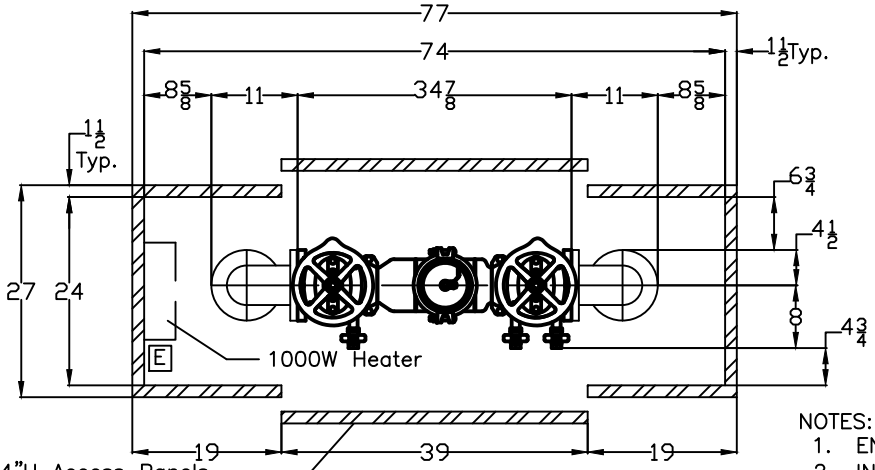

TOP VIEW

NOTES:
1. ENCLOSURE SELECTED: BFP3–O
2. INSIDE DIMENSIONS: 74" L X 24" W X 54" H.
3. OUTSIDE DIMENSIONS: 77" L X 27" W X 57" H.
4. SLAB DIMENSIONS: 89" L X 39" W X 6" THICK.

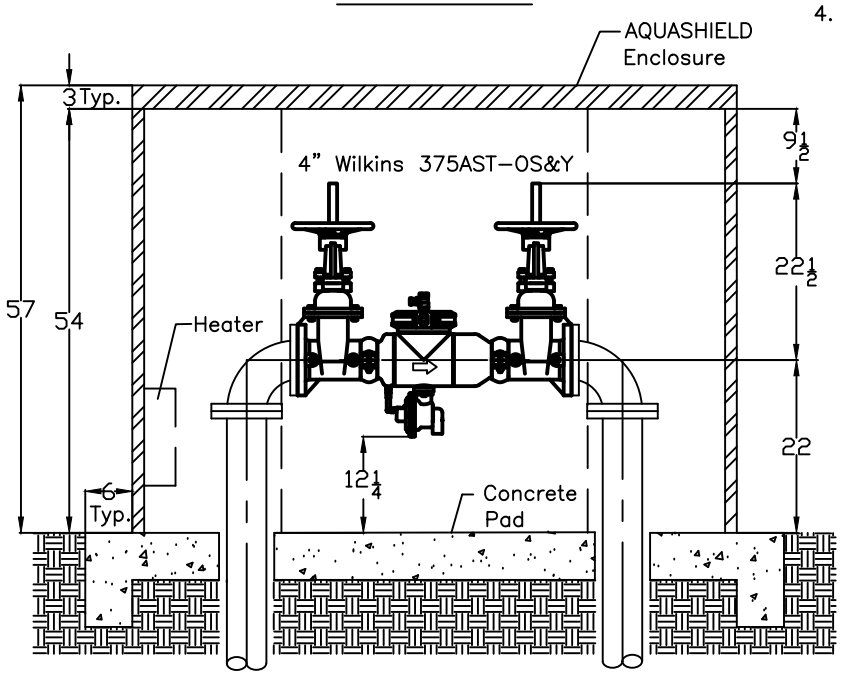

FRONT VIEW

DIRECTION OF FLOW ⇨

CONTRACT NO:	4" WILKINS 375AST–OS&Y			
DRAWN BY: S. THOMAS				
CHECK BY:	AquaSHIELD ENCLOSURES	1805 W.. 37th Place North Little Rock, AR 72118 T: 501–791–1800 C: 501–791–1801		
APPR. BY:				
ISSUED BY:				
DATE DRAWN: 11/11/2019	SIZE 4"	ENCL. NO BFP3–O	DWG NO 4 WILKINS 375AST–OSY	REV
DATE REVISED:	SCALE 1:1		WEIGHT 225	SHEET 1 OF 1

FNAME REVDATE USER