| REVISIONS | | | | |
|---|---|---|---|---|
| ZONE | REV | DESCRIPTION | DATE | APPROVED |
| | | | | |
| | | | | |

NOTES:
1. ENCLOSURE SELECTED: BFP4-OS
2. INSIDE DIMENSIONS: 102" L X 28" W X 54" H.
3. OUTSIDE DIMENSIONS: 105" L X 31" W X 57" H.
4. SLAB DIMENSIONS: 117" L X 43" W X 6" THICK.

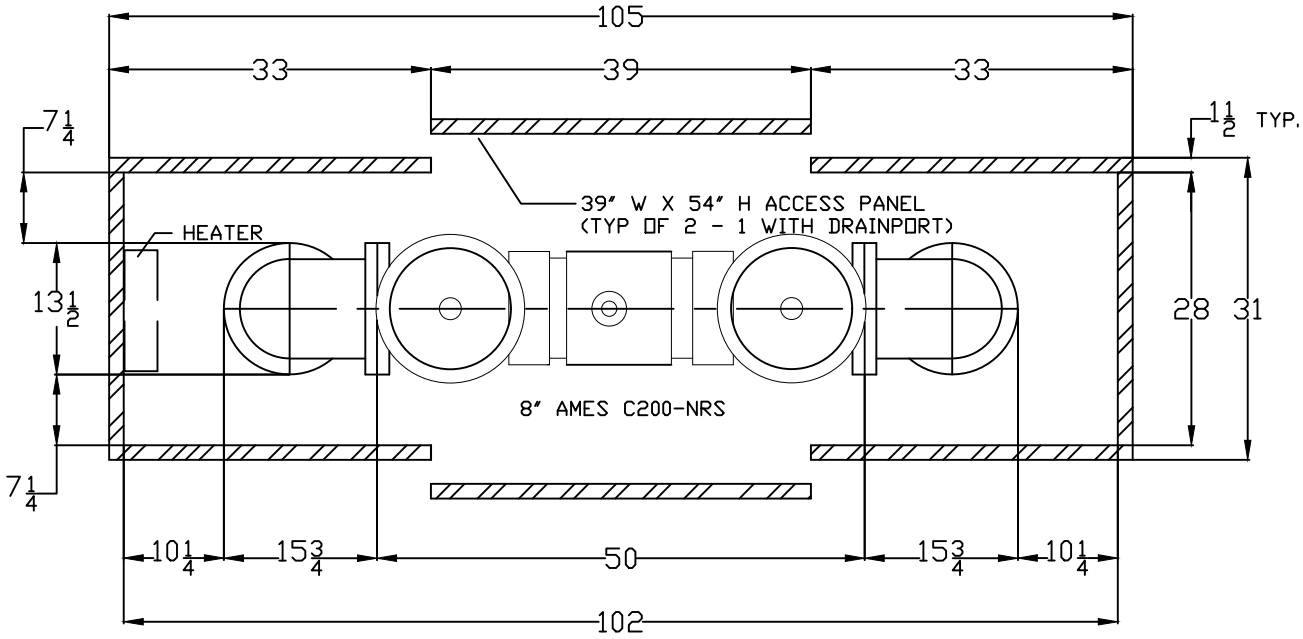


PLAN VIEW

| | |
|---|---|
| CONTRACT NO: | 8 AMES C200-NRS |
| DRAWN BY: S. THOMAS | |
| CHECK BY: | AquaSHIELD ENCLOSURES — 1805 W., 37th Place, North Little Rock, AR 72118, T: 501-791-1800, C: 501-791-1801 |
| APPR. BY: | |
| ISSUED BY: | |
| DATE DRAWN: 6/14/19 | SIZE 8" · ENCL. NO BFP4-OS · DWG NO 8 AMES C200-NRS (1) · REV |
| | SCALE 1:1 · WEIGHT 450 · SHEET 1 OF 2 |

FNAME REVDATE USER